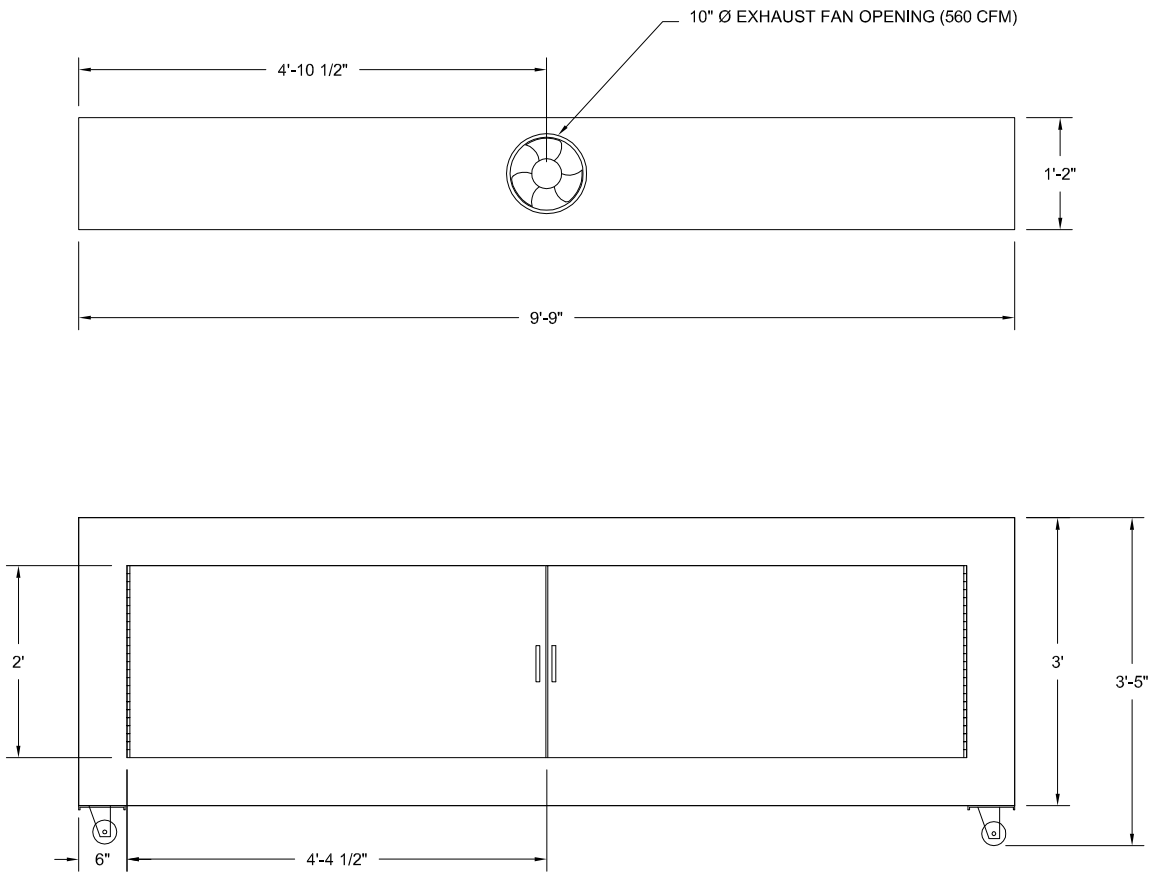

NOTE: MUST BE SLAVED TO A9080
HANCO POWER PAK

APPROX. WEIGHT: 255 LBS.

- REFERENCES AND REVISIONS -

REV. NO.	DATE:	REMARKS: DESCRIPTION	BY:

This drawing is proprietary information and considered intellectual property of Hanco International. Unauthorized reproducing, electronic transmission, or distribution without written authorization of Hanco International is prohibited.

HANCO INTERNATIONAL
DIVISION OF THE HANNON COMPANY
1605 WAYNESBURG DR. SE
CANTON, OHIO, U.S.A. 44707
PH: 330/456-4728 FAX: 330/456-3323

TITLE:

PORTABLE STICK TESTER

DATE:	SCALE:	SHEET:
3-21-2000	1/2" = 1'	1 OF 1

DRAWN BY	SERIES:	DRAWING NO.:
C PANTAGES	DA	A9196